High-Accuracy Digital Thermometer

DP97

1 YEAR WARRANTY

Exceptional Performance and Versatility!

DP97 shown smaller than actual size.

Single or Dual Pt100 Inputs, A, B and A-B

High Resolution 0.01°C

Very High Accuracy and Stability

Better Than 40 mK (0.04°C) System Accuracy (Based on DP97-Probe Calibration)

PC Software Included

Digital Matching of Calibrated Sensors

Circuitry Self-Calibrates for Total Stability

3- or 4-Wire Sensors with Automatic Recognition

Readout Directly in °C, °F, Kelvin, and Ω

RS232 (Remote Control and Measure) as Standard

Programmable Analog Output

Bench Mounting (Or Panel Option)

Rechargeable Battery/AC Adaptor

A precision portable thermometer for metrology and other exacting laboratory applications, the DP97 is a proven instrument used world-wide as a laboratory and site standard in pharmaceutical, medical, food, environmental testing, R&D, and general industrial applications. It is ideal as the reference standard for temperature calibration baths.

Based on a high resolution 20-bit analog-to-digital converter, all measurement computations are performed digitally without drift. The 5-digit LED display provides a readout to 0.01°C over the entire -199.99 to 849.99°C range; alternatively °F, Kelvin or Ω values can be displayed up to 999.99 units.

Single or dual Pt100 3- or 4-wire sensors are accepted; the DP97 will automatically recognize and select 3- or 4-wire mode. Display of input A, B or A-B (differential) can be selected; a differential "zero function" allows sensor accuracy differences to be eliminated for accurate differential readings.

When used with the DP97-Probe1, the system has a temperature range of -50 to 250°C (-58 to 482°F), with an accuracy of ±0.04°C. When used with the DP97-Probe2, the system has a temperature range of 0 to 400°C (32 to 752°F), with an accuracy of ±0.04°C.

Specifications

[All values are valid for a nominal 110/240V, 50/60 Hz supply and 20°C (68°F) ambient temperature ±2°C (±35.6°F)].

General

Range/Sensor Type: Pt100 to IEC 751 (ITS 90), -199.99 to 849.99°C (327.98 to 1561.98°F), Ro = 100 Ω

Input Channels: 2, each with 3- or 4-wire connection and automatic recognition (with manual override)

Overall Instrument: ±0.02°C ±1 digit for range -200 to 500°C (-328 to 932°F)

Accuracy (4 Wire): ±0.005% reading ±1 digit for range 500 to 850°C (932 to 1562°F)

Overall System: Better than ±0.04°C (±32.07°F) with DP97-Probe1 precision probe

Accuracy (4 Wire): -50 to 250°C (-58 to 482°F) with DP97-SYS-CAL calibration

Linearization Conformity: ±0.01°C

Stability vs Ambient Temperature: 0.0025°C/°C (0.0045°F)

Warm-Up Time: Negligible under normal ambient conditions; 5 to 10 minutes for full stability unless stored at low temperature

Pt100 Sensor Current: 0.5 mA nominal

Display Resolution: 0.01°C, K, °F, Ω

Measurement Units: °C, °F, K, Ω (user selectable)

Measurement Modes: Input A or B or A-B (differential); null facility in A-B mode

Custom Calibration: Up to 10 calibration values can be allocated (via PC software) to channels A and B; values are retained in non-volatile memory until replaced by user

Null Function: Corrects differential temperature readout between the 2 sensors to zero

Sensor Lead Resistance: 25 Ω each lead maximum

Supply: Internal rechargeable batteries; AC line 110/220V, 50/60 Hz; adaptor included; battery charge life up to 12 hours dependent on pattern of usage; charger requirement 10 to 11.5 Vdc, 1 A

Power Consumption: 10 W nominal, 20 W max when battery is charging

Series Mode Rejection: 60 dB @ 50 Hz (50 mVrms applied)

Common Mode Rejection: 30 Vrms applied between input and earth produces no measurable effect

Ambient Temperature: 0 to 50°C (32 to 122°F) non-condensing; ensure stable temperature range for best accuracy; allow adequate warm-up time if moved from region of low ambient temperature prior to use

EMC Compliance: Meets EMC regulations RFI to BS EN 50081-1, 1992 and immunity to BS.EN 50082-1, 1992

CE Compliance: CE marked and compliant to current regulations

Display: 14 mm (0.6") LED, 5-digit, 999.99 range

Front Panel Controls: 5 x membrane keys for user functions

Input Connections: 2 x Pt100 via "D" connectors

Probes Common Specifications

Accuracy: Class 1/10 DIN = ±1/10 (0.3 + 0.005 |t|)°C per IEC60751 (alpha = 0.00385 Ω/Ω/°C)

Stainless Steel Sheath:
Leadwire: 4 conductor, stranded 26 AWG, 2 m (6.5'), PTFE insulated with 9-pin connector

DP97-PROBE1: 250 mm L (10") x 6 mm D (1/4"); for use -50 to 250°C (-58 to 482°F)

DP97-PROBE2: 350 mm L (14") x 6 mm D (1/4"); for use -50 to 450°C (-58 to 842°F)

Mechanical

Mechanical/Case: Metal, bench-top; optional panel mounting kit

Dimensions: 145 L x 66 W x 240 mm D (5.7 x 2.6 x 9.4")

Weight: 1.5 kg (4.0 lb) approximately

Communications

RS232 (Standard): Remote control and measure; isolated, 9600 Baud, 8 data, no parity, 1 stop-bit

PC Software: Running in Windows® allows (standard) programming of custom calibration and preview of set values from a PC; provides a print facility and can store sets of correction values

Analog Output: Analog 0 to 1 Vdc between standard programmable lower and upper set limits; non-isolated

Accuracy: 0.5% rdg

PC Software Included

NEW®

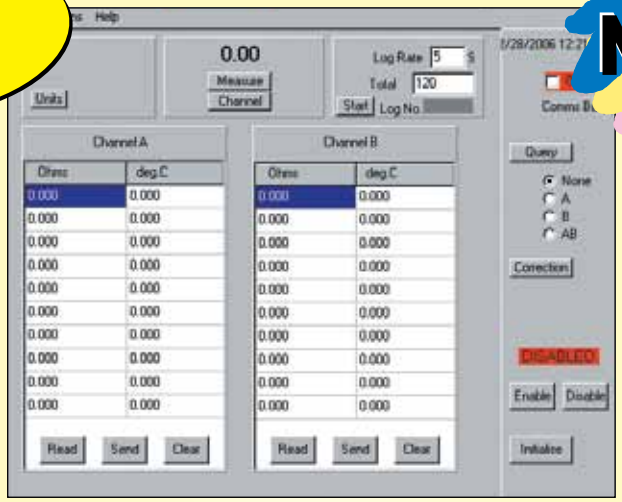

User-Friendly Operation

Remote Control and Measurement

Programming and/or Editing of Pt100 Sensor Calibration Correction Values

Reads Correction Values in Instrument Memory

Load/Save/Print Correction Values

Log Readings to File with Date/Time/User Name/Probe Reference Number/Channel A/ Channel B (Optional)

Includes Help File

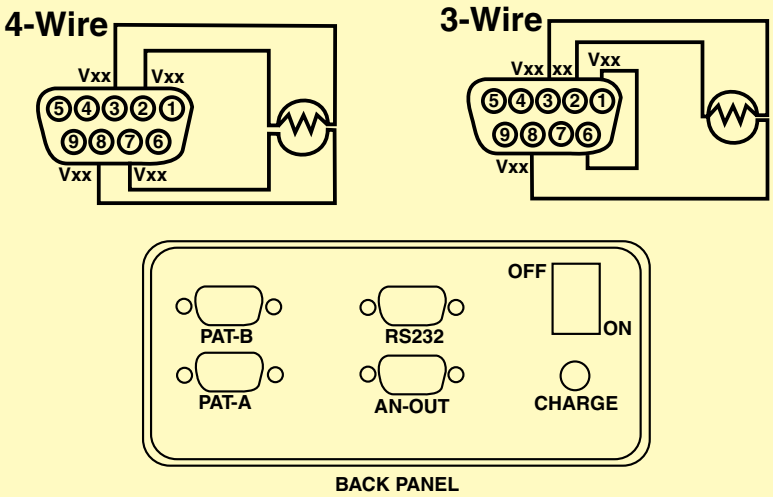

To Order

Model No.	Description
DP97	High-accuracy digital thermometer

Accessories

Model No.	Description
DP97-PROBE1	Precision Pt100 probe, temperature range -50 to 250°C (-58 to 482°F)
DP97-PROBE2	Precision Pt100 probe, temperature range -50 to 450°C (-58 to 842°F)
DP97-SW	Replacement software
DP97-CONN	Replacement 9-pin connector
PSU-DP97	Replacement power supply

K